COMPONENT MAINTENANCE MANUAL

Issue Date: 88.04.20 Révisions 1 : 90.12.20. 2: NATO code 1.10.2004	iec electronique monaco www.iec-monaco.com Tél. +377 92 05 66 88 Fax: +377 92 05 77 26 3, Rue de l'Industrie MC 98000 MONACO	**SJ 328** ROTARY SWITCH P.N: 058-010-00

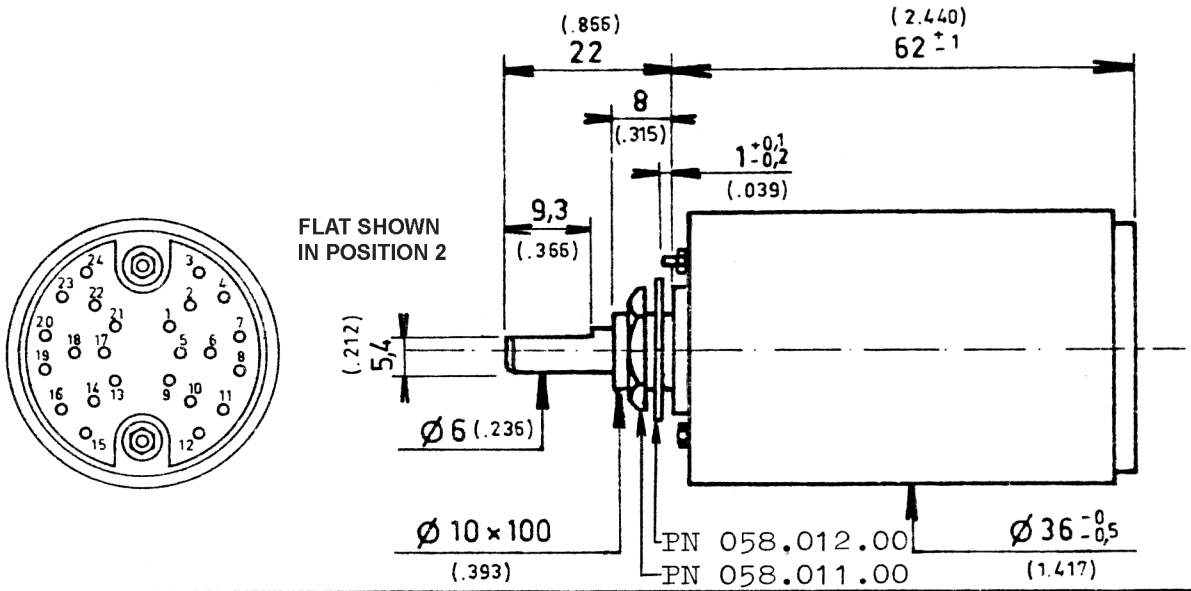

PANEL DRILLING

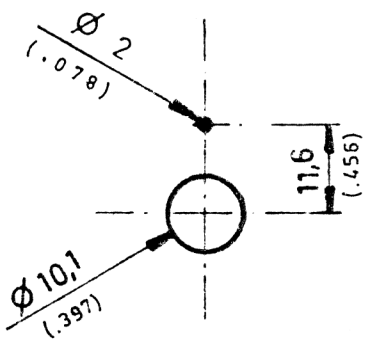

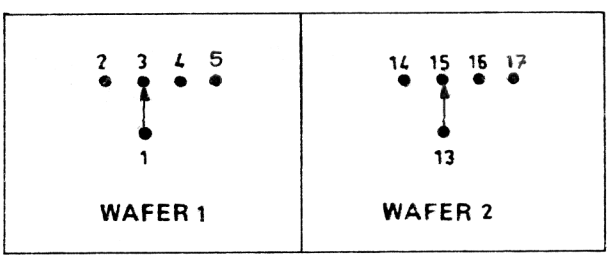

Shorting contacts

Angle between two positions : 60° **180° ROTATION LIMIT**

GENERAL CHARACTERISTICS

Max. operating temp. dry heat	+85°C. (185°F)
Min. operating temp. dry cold	-55°C. (131°F)
Switches with solid silver contacts	
Rated voltage (Volts)	28 DC. 115 AC
Rated current (Amp)	2 - 1,5
Max. breaking power (Watts)	170
Contact resistance (ohms)	< 0,05

DIELECTRIC STRENGTH IN VOLTS A.C.

Between contacts	1500
Between contacts and pole-pieces	1500
Between contacts, pole-pieces and ground	1500
Between two adjacent contacts (Megohms)	1.10^3
Between contacts and ground (Megohms)	1.10^3